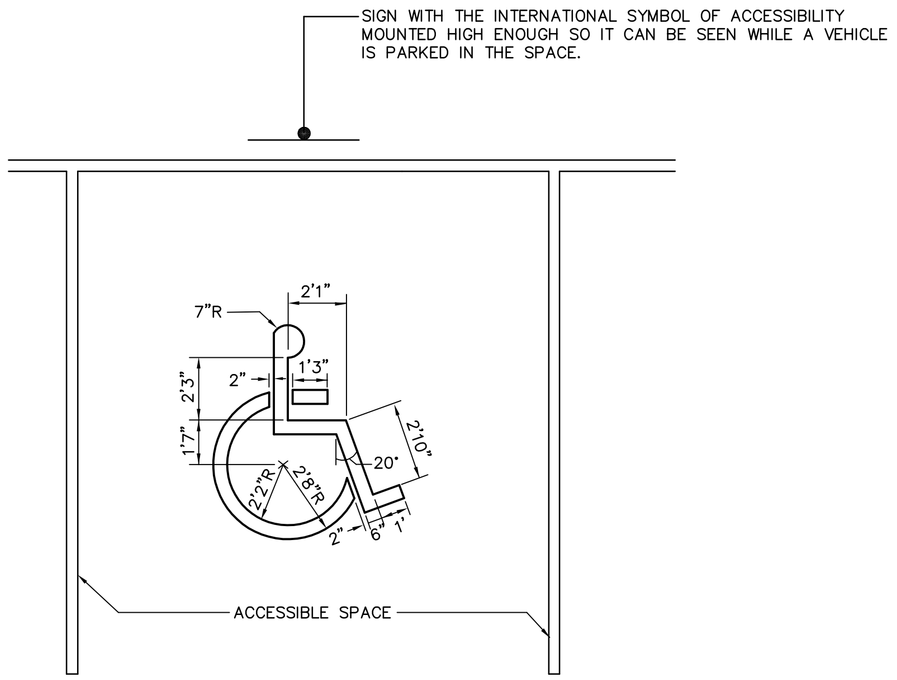

HANDICAP SYMBOL PAINT SHALL CONFORM TO STRIPING PAINT AS SPECIFIED. (SYMBOL SHALL BE CENTERED IN SPACE)

ACCESSIBLE SPACE AND PAINTED ISLAND DETAIL

NOT TO SCALE

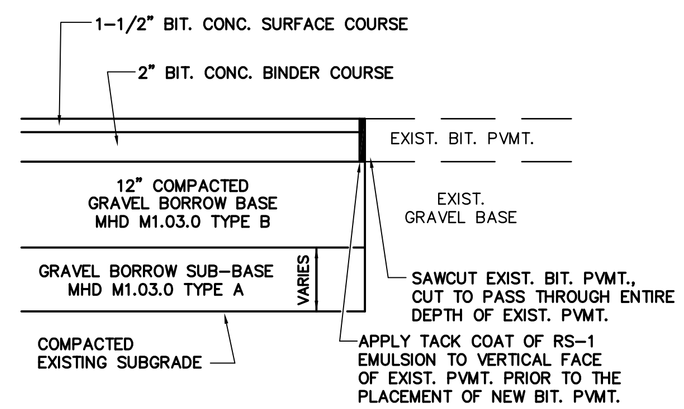

BIT. CONC. PAVEMENT DETAIL

NOT TO SCALE

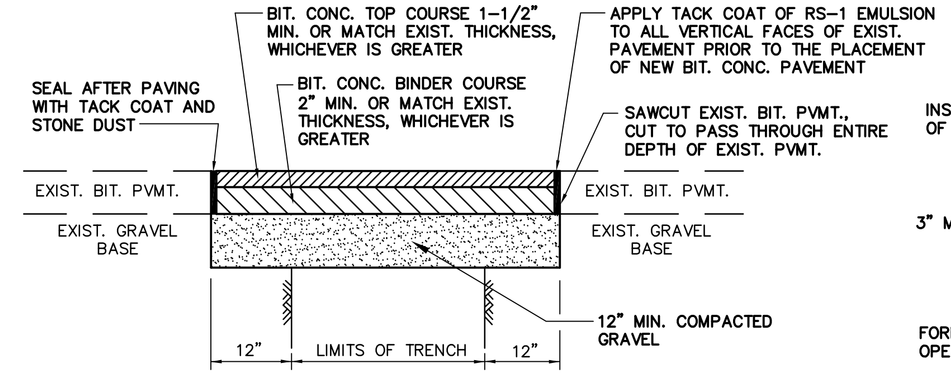

NOTES:

1. ALL INSTALLATION AND MATERIAL SPECIFICATIONS PER MASSACHUSETTS HIGHWAY DEPARTMENT STANDARD SPECIFICATIONS FOR HIGHWAYS AND BRIDGES.
2. ANY PAVEMENT PATCH APPLIED AT A WIDTH OF 6' OR GREATER IS TO BE PLACED BY MACHINE/BOX SPREADER.

BIT. CONC. PAVEMENT PATCH DETAIL

NOT TO SCALE

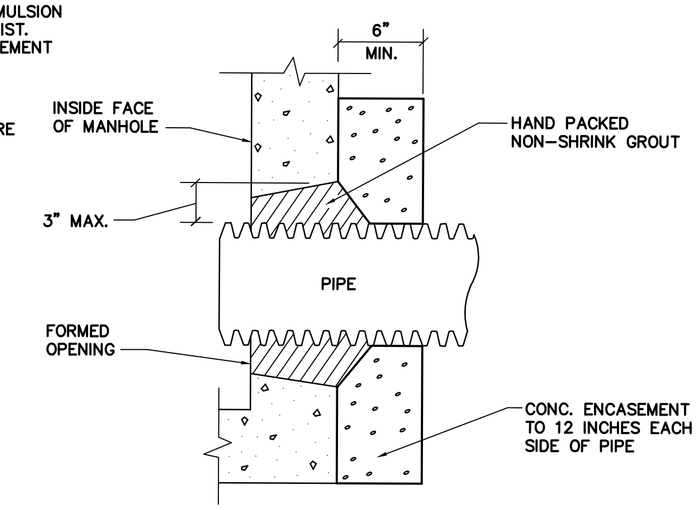

PIPE CONNECTION DETAIL

NOT TO SCALE

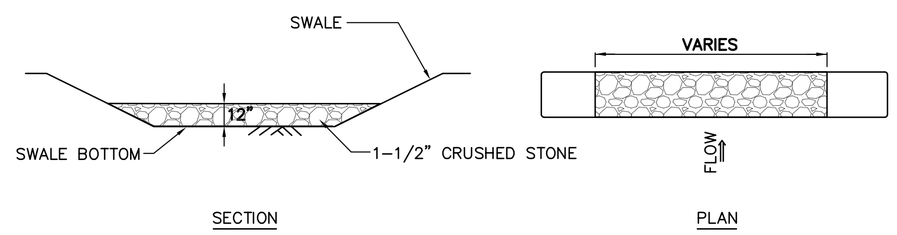

NOTE:
STONE CHECK DAM TO BE PLACED EVERY 100 FEET

STONE CHECK DAM DETAIL

NOT TO SCALE

EROSION CONTROL BLANKET – JUTE MATTING

SLOPE INSTALLATION

NOTE: PROVIDE ON ALL SLOPES 4:1 OR GREATER.

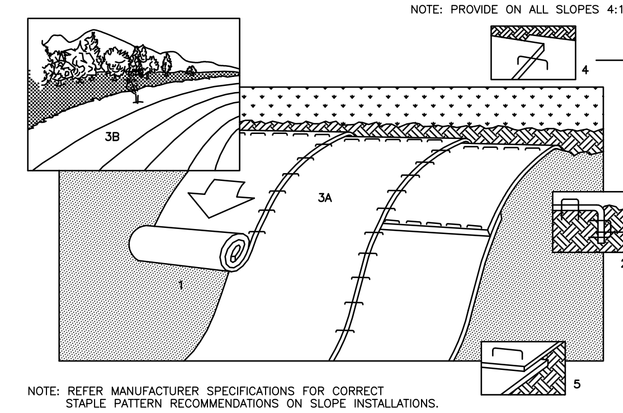

STAPLE PATTERN GUIDE

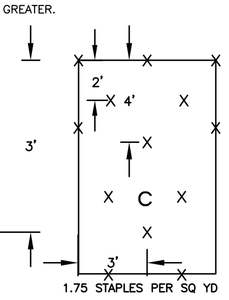

NOTE: REFER MANUFACTURER SPECIFICATIONS FOR CORRECT STAPLE PATTERN RECOMMENDATIONS ON SLOPE INSTALLATIONS.

1. PREPARE SOIL BEFORE INSTALLING BLANKETS, INCLUDING APPLICATION OF LIME, FERTILIZER, AND SEED. NOTE: WHEN USING CELL-O-SEED DO NOT SEED PREPARED AREA. CELL-O-SEED MUST BE INSTALLED WITH PAPER SIDE DOWN.
2. BEGIN AT THE TOP OF THE SLOPE BY ANCHORING THE BLANKET IN 6" DEEP X 6" WIDE TRENCH. BACKFILL AND COMPACT THE TRENCH AFTER STAPLING.
3. ROLL THE BLANKETS (A.) DOWN OR (B.) HORIZONTALLY ACROSS THE SLOPE.
4. THE EDGES OF PARALLEL BLANKETS MUST BE STAPLED WITH APPROXIMATELY 2" OVERLAP.
5. WHEN BLANKETS MUST BE SPLICED DOWN THE SLOPE, PLACE BLANKETS END OVER END (SHINGLE STYLE) WITH APPROXIMATELY 4" OVERLAP. STAPLE THROUGH OVERLAPPED AREA, APPROXIMATELY 12" APART.
6. EROSION CONTROL BLANKET SHALL BE CURLEX II BY AMERICAN EXCELSIOR, ARBICO ORGANICS, ASC OR APPROVED EQUAL.

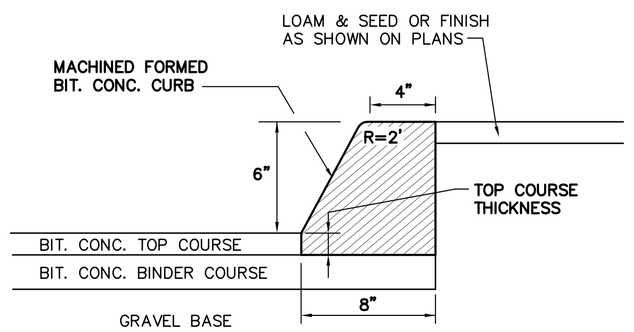

BIT. CONC. CURB DETAIL

NOT TO SCALE

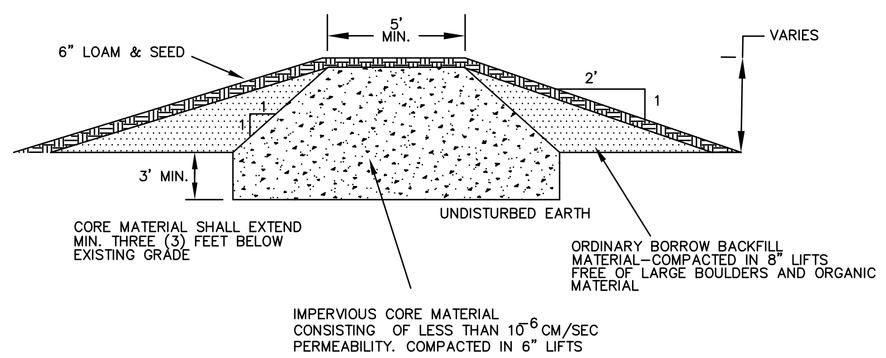

NOTE: FOUNDATION FOR DAM CONSTRUCTION SHALL BE CLEARED OF ALL TOP SOIL, ROCKS, DEBRIS, STUMPS, ETC. TO A FIRM SURFACE. IN NO CASE SHALL THIS EXCAVATION BE LESS THAN 12 INCHES. SUBGRADE SHALL BE SCARIFIED AND MOISTENED TO A DEPTH OF 3 INCHES PRIOR TO PLACEMENT OF FILL.

IMPERVIOUS CORE DETAIL

REQUIRED FOR STORMWATER BASIN CONSTRUCTION IN FILL
NO SCALE

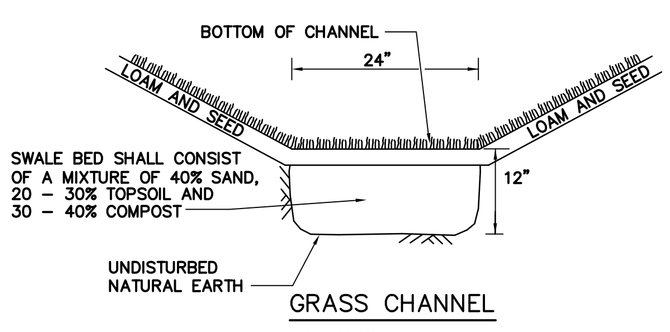

GRASS CHANNEL

NOT TO SCALE

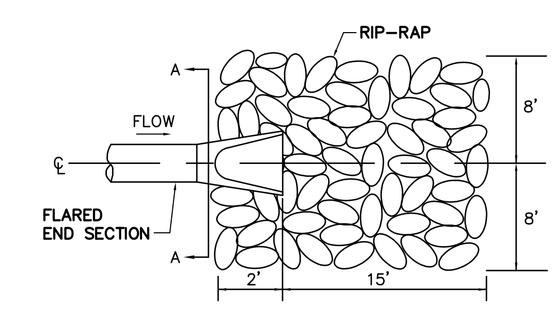

PLAN

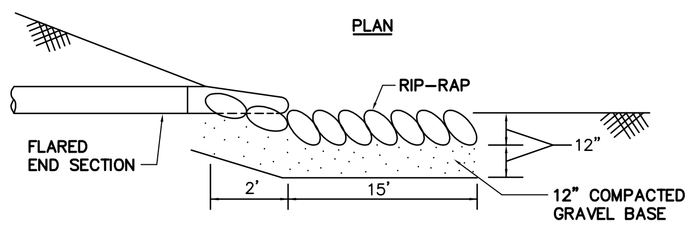

SECTION

Each stone shall weigh not less than 50 pounds nor more than 125 pounds, and at least 75% of the volume shall consist of stones weighing not less than 75 pounds each. The remainder of the stones shall be so graded that when placed with the larger stones, the entire mass will be compact. Median stone diameter to be 3 feet.

RIP-RAP AT FLARED END SECTION (BASIN)

NOT TO SCALE

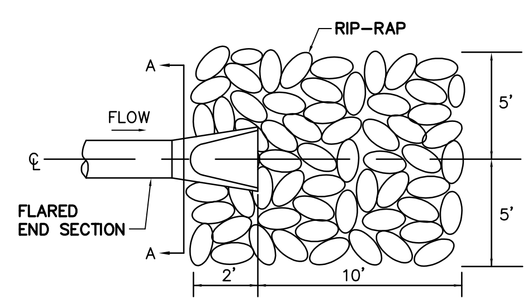

PLAN

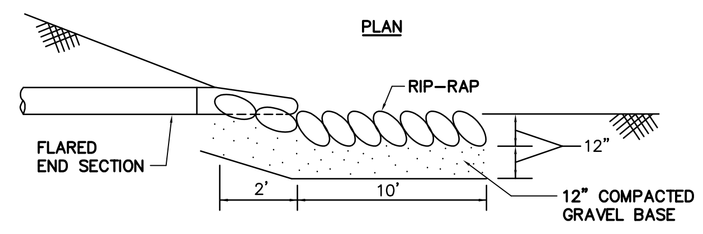

SECTION

Each stone shall weigh not less than 50 pounds nor more than 125 pounds, and at least 75% of the volume shall consist of stones weighing not less than 75 pounds each. The remainder of the stones shall be so graded that when placed with the larger stones, the entire mass will be compact.

RIP-RAP AT FLARED END SECTION (SWALE)

NOT TO SCALE

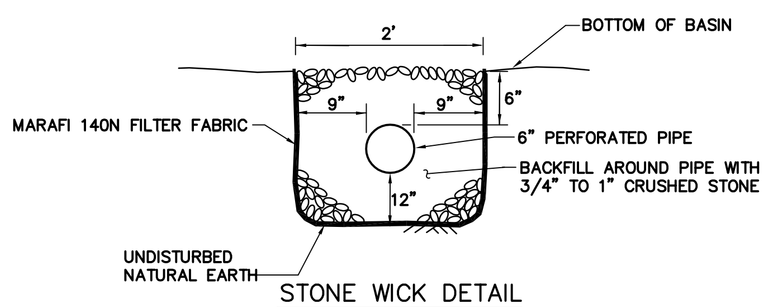

STONE WICK DETAIL

NOT TO SCALE

APPROVAL UNDER
SITE PLAN
IS REQUIRED

DATE

TOWN OF LUNENBURG
PLANNING BOARD

CHECKED BY: BFM	SCALE: AS NOTED	JOB NUMBER: 13334	PLAN NUMBER: 30-D-40	FIELD BOOK REF(S): BY OTHERS
DRAWN BY: MFP	DATE: 7/13/15	SHEET NUMBER: 9 OF 9	COMPS: 9087	PLAN REF(S): BY OTHERS

REVISIONS

NO.	DESCRIPTION	DATE	BY
1	PER ENGINEERING REVIEW COMMENTS	8/18/15	MFP

CONSTRUCTION DETAILS #2
OFF
274 PROSPECT STREET
IN
LUNENBURG, MA

PREPARED FOR:
GREENER LIVING LUXURY HOMES
811 CHASE ROAD
LUNENBURG, MA 01462

COMMONWEALTH OF MASSACHUSETTS
BRIAN F. BINGHAM
CIVIL
No. 38012
REGISTERED PROFESSIONAL ENGINEER

WHITMAN & BINGHAM
ASSOCIATES
REGISTERED ENGINEERS & LAND SURVEYORS
540 MECHANIC STREET
LEOMINSTER, MASSACHUSETTS 01453
TEL. (978) 537-5506
FAX. (978) 537-1423